Quick Start Guide

PFD00-16828

Smart Feed

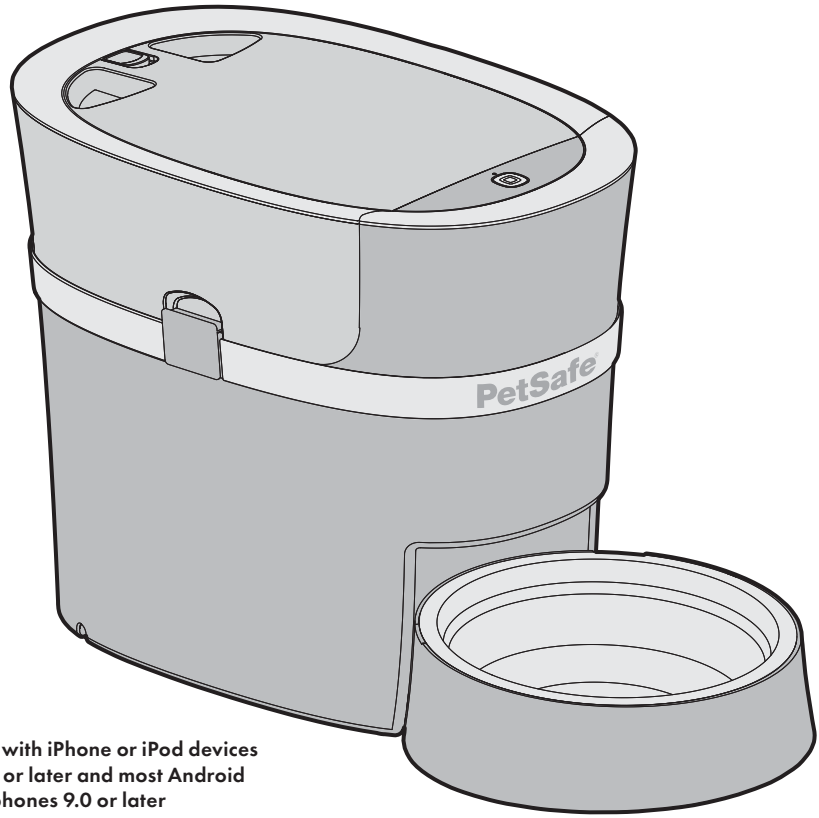

Works with iPhone or iPod devices iOS 12 or later and most Android smartphones 9.0 or later

Please read this entire guide before beginning.

Welcome

You and your pet were made for each other. Our aim is to help you have the best companionship and the most memorable moments together. Your new Smart Feed is designed to give you peace of mind knowing your pet will be fed on time.

We know that safe pets make happy owners. Before getting started, please take a moment to read through the important safety information. If you have any questions, please don't hesitate to contact us.

Hereinafter Radio Systems Corporation and any other affiliate or Brand of Radio Systems Corporation may be referred to collectively as "We" or "Us".

IMPORTANT SAFETY INFORMATION

Explanation of Attention Words and Symbols used in this guide



This is the safety alert symbol. It is used to alert you to potential personal injury hazards. Obey all safety messages that follow this symbol to avoid possible injury or death.

⚠WARNING WARNING indicates a hazardous situation which, if not avoided, could result in death or serious injury.

CAUTION CAUTION, used without the safety alert symbol, indicates a hazardous situation which, if not avoided, could result in harm to your pet.

NOTICE NOTICE is used to address safe use practices not related to personal injury.

⚠WARNING

- Do NOT immerse control panel in water. Base unit should NOT be submerged in water at any time, as this may damage electronic components.
- Do NOT place anything on top of the pet feeder. The unit starts automatically. Keep clear.
- Dispose of all packaging materials properly. Some items may be packed in polybags; these bags could cause suffocation; keep away from children and pets.
- Do NOT allow small children to play with, in or around pet feeder.
- To reduce the risk of injury, close supervision is necessary when an appliance is used by or near children.
- Pet feeder should be placed on a level surface.
- To protect against electric shock, if using power cord do not place power cord or plug in water or other liquids.
- Only use attachments recommended or sold by the manufacturer.
- Do not unplug by pulling on power cord. To unplug, grasp the plug, not the power cord.
- Do not operate any appliance if it has a damaged power cord or plug, or if it is malfunctioning or has been damaged. Call the Customer Care Center immediately for further instructions.
- For a portable appliance - To reduce the risk of electrical shock, do not place or store an appliance where it can fall or be pulled into a tub or sink.
- Always unplug any appliance when not in use, before putting on or taking off parts and before cleaning.
- Do not use an appliance for anything other than its intended use.
- If the plug of this device gets wet, turn off the electricity to that wall outlet. Do not attempt to unplug.
- Examine this appliance after installation. Do not plug in if there is water on the Power Cord or plug.
- To avoid tripping, always position power cord out of the way of foot traffic.
- Do not use pet feeder for anything other than intended use. The use of attachments not recommended or sold by the manufacturer may cause an unsafe condition. Do not modify the pet feeder.

CAUTION

- Do not allow pets to chew on or swallow any parts. If you are concerned about the power cord, purchase a cord conduit (a hard plastic protector) at any hardware store to protect the power cord.
- Intended for use with dogs or cats only.
- Do NOT use this pet feeder with puppies, kittens, dogs or cats not able to reach the food tray or with any physical disability.
- Before leaving for extended time, always replace batteries with new batteries.
- Check operation frequently to be sure the pet feeder is dispensing properly.

NOTICE

- Do not attempt repairs on the pet feeder yourself.
- If an extension cord is necessary, an extension cord with a proper rating should be used.
- Do not install or store pet feeder where it will be exposed to weather or temperatures below 40° F.
- Do not lift pet feeder by lid, hopper, bowl or bowl holder. Lift and carry feeder using both hands and hopper base, while keeping unit in upright position.
- Do NOT use outdoors. FOR INDOOR HOUSEHOLD USE ONLY.
- For dry or semi-moist food use only.
- Do NOT use wet, canned or moist food.
- Do NOT place any foreign object in the pet feeder.
- Do NOT disassemble the pet feeder other than components as instructed in the operating guide.
- Do not mix old and new batteries.
- Do not mix standard, alkaline or rechargeable batteries.
- Do not use rechargeable batteries.
- Exhausted batteries should be removed immediately. Do not dispose of batteries with household waste.
- Read and observe all important notices listed on the pet feeder and in the packaging.

SAVE THESE INSTRUCTIONS

In the Box

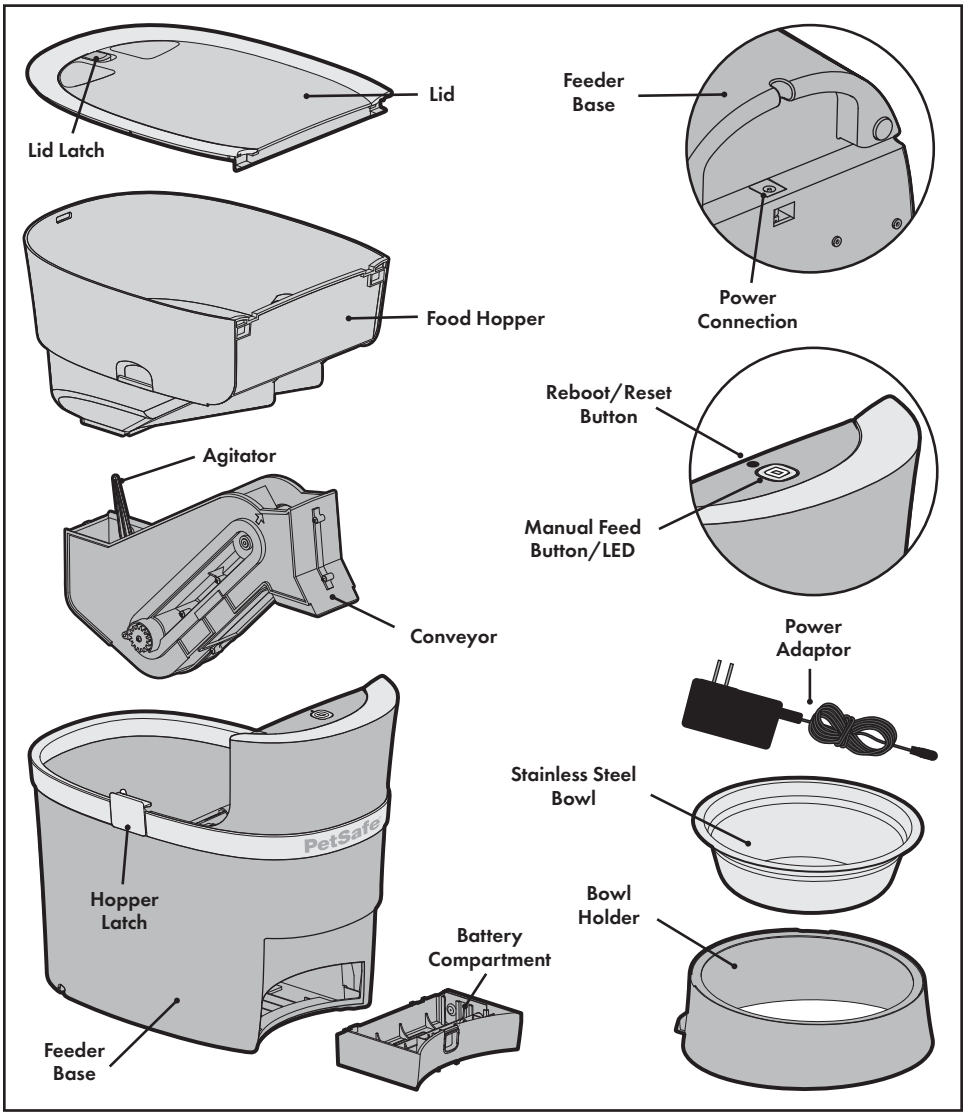

System Requirements

- iPhone or iPod with iOS 12 or later or compatible Android smartphone 9.0 or later
- Wireless router 2.4GHz (802.11b/g/n)
- High-speed internet connection

Setup and Assemble Feeder

1. Remove the components located inside the food hopper.

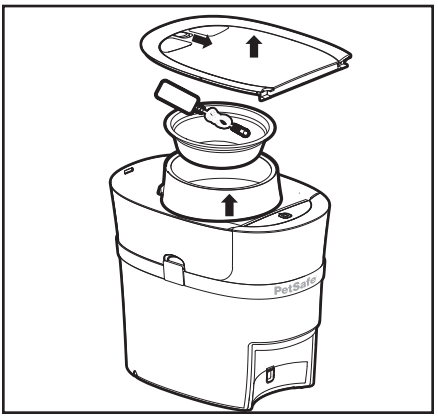

2. We recommend you wash and rinse the bowl, bowl holder, food hopper, lid and conveyor. Once parts are dry, ensure a conveyor belt lip is aligned with the arrows on the side. Replace the conveyor and food hopper.

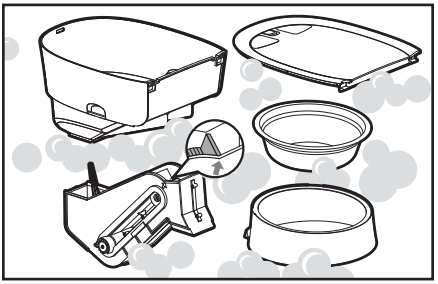

3. Plug in the power adapter. If you want, install (4) D-Cell alkaline batteries in case of a power outage. The LED will blink yellow indicating the feeder is on and in setup mode.

CAUTION	Batteries are for back-up power only and should not be used as the main power source.

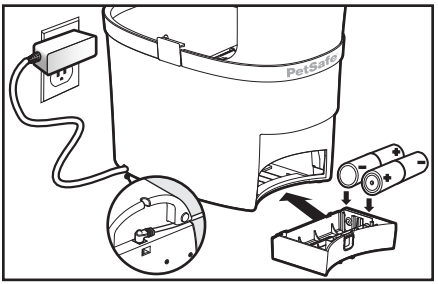

4. Place the bowl into the bowl holder. Lift feeder and slide the holder notch into the groove on the bottom of the feeder.

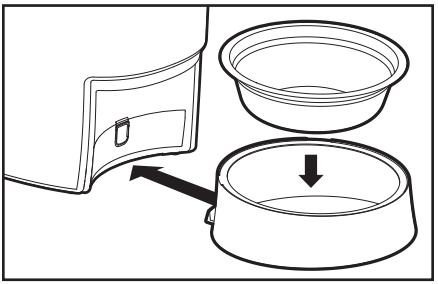

5. Download the My PetSafe® app from your phone's app store. Open the app and follow the on-screen instructions to connect to your feeder. You will need a valid email address and your home Wi-Fi password. Complete all instructions and app setup before filling with food.



6. Fill the hopper with your pet's favorite dry or semi-moist food. Level the food, and replace the lid.

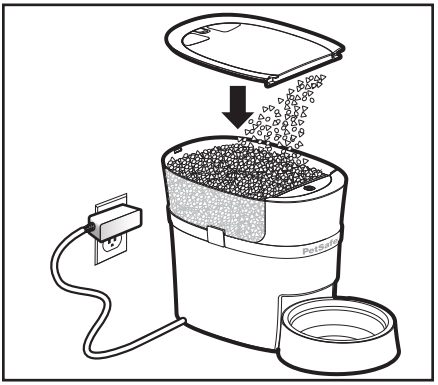

7. Prime the feeder by pressing and holding the manual feed button until food starts to dispense into the bowl or use the "Feed Now" feature in the app.

   Note: The feeder conveyor must be primed anytime the food gets low to ensure correct meal sizes are dispensed.

   Your Smart Feed is now ready for use! Use the Smart Feed app to schedule meals and setup notifications.

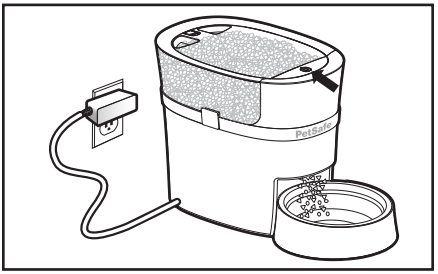

Setup Troubleshooting

If you went through the setup process and were unable to get your feeder connected, first try the instructions within the app. If you are still having issues, then try the steps below:

1. Ensure your home Wi-Fi is working properly and your phone is connected to it.
2. Place your feeder near your router during initial setup.
3. If you are an Android user, make sure to select "stay connected" to your Wi-Fi during setup. Or if you receive a "no internet access" notification, open it to reconnect to your Wi-Fi.

Smart Feed Application

Icon	Description
	**Main Screen:** Where you access the application features and view the next scheduled meal time and amount.
	**Activity Log:** Shows the last 2 weeks of the feeder's activities, including when a meal was dispensed and any errors with the feeder.
	**Settings:** Shows the feeder and app settings and where they can be turned on or changed, including the pet lock feature, notifications, and Wi-Fi network. Also, where the feeder can be deleted from the app.
	**Feed Now:** Push to prime the feeder conveyor or to immediately feed a snack or extra meal.
	**Meal Schedule:** Where you program your pet's meal times and amounts. Also where the meal schedule can be turned off to keep the feeder from dispensing food.
	**Slow Feed Mode:** Slowly dispenses all scheduled meals with amounts more than 1/8 cup over a 15-minute period to help slow down fast eaters.
	**Low Food:** Shows when the food level is low inside the food hopper and the feeder needs refilled.

LED Indicator

Light Color and Pattern	What It Means
Yellow Blinking	Feeder has power and is in setup mode.
Yellow Solid	Smartphone is connected to the feeder in setup mode.
Blue Blinking Slow	Feeder is connected to Wi-Fi but no internet.
Blue Blinking Fast	Feeder is trying to connect to Wi-Fi or is offline.
Blue Solid	Feeder is connected to Wi-Fi with internet and fully operational.
White Blinking	Reboot mode which triggers the feeder to attempt to reconnect to your Wi-Fi without losing the programmed settings.
White Solid	Factory reset mode which deletes all programmed settings returning the feeder to setup mode.
Red Blinking	Wi-Fi credentials failed during setup.
Red Solid	Mechanical error such as a jam or motor issue.

Reboot /Reset Button

A reboot tries to reconnect the feeder to your Wi-Fi while saving all the programmed meals and settings.

1. Use the end of a paper clip to press and hold the reboot/reset button for 3 to 5 seconds until the LED blinks white to show a successful reboot.
2. If the feeder successfully reconnects to your Wi-Fi with internet, the LED will blink blue then turn solid showing it is fully connected and operational.

A reset deletes all the programmed meals and settings to return the feeder to setup mode.

1. Press and hold the reboot/reset button with the end of a paper clip for 8+ seconds until the LED is solid white to show a successful reset.
2. The LED will then show blinking yellow returning the feeder to setup mode.

Terms of Use and Limitation of Liability

1. **Terms of Use:** The use of this product is subject to your acceptance without modification of the terms, conditions and notices contained with this product. Use of this product implies acceptance of all such terms, conditions, and notices. If you do not wish to accept these terms, conditions, and notices, please return the product, unused, in its original packaging and at your own cost and risk to the relevant Customer Care location together with proof of purchase for a full refund..
2. **Proper Use:** Proper Use includes, without limitation, reviewing the entire product manual and any specific safety information statements. The specific temperament or size/weight of your pet may not be suitable for this product. If you are unsure whether this product is appropriate for your pet, please consult your veterinarian or certified trainer prior to use. For products used with pets where training is desired, Radio Systems Corporation recommends that these training products are not used if your pet is aggressive and accepts no liability for determining suitability in individual cases.
3. **No Unlawful or Prohibited Use:** This product is designed for use with pets only. This device is not intended to harm, injure, or provoke. Using this product in a way that is not intended could result in violation of Federal, State or local laws.
4. **Limitation of Liability:** In no event shall Radio Systems Corporation or any of its associated companies be liable for (i) any direct, indirect, punitive, incidental, special or consequential damage and/or (ii) any loss or damages whatsoever arising out of or connected with the use or misuse of this product. The Purchaser assumes all risks and liability from the use of this product to the fullest extent permissible by law.
5. **Modification of Terms and Conditions:** Radio Systems Corporation reserves the right to change the terms, conditions and notices governing this product from time to time. If such changes have been notified to you prior to your use of this product, they shall be binding on you as if incorporated herein.

Compliance

FCC: USA

This device complies with part 15 of the FCC Rules. Operation is subject to the following two conditions: (1) This device may not cause harmful interference, and (2) this device must accept any interference received, including interference that may cause undesired operation

Note: This equipment has been tested and found to comply with the limits for a Class B digital device, pursuant to part 15 of the FCC Rules. These limits are designed to provide reasonable protection against harmful interference in a residential installation. This equipment generates, uses, and can radiate radio frequency energy and, if not installed and used in accordance with the instructions, may cause harmful interference to radio communications. However, there is no guarantee that interference will not occur in a specific installation. If interference does occur to radio or television reception, which can be determined by turning the equipment off and on, the user is encouraged to try to correct the interference by one or more of the following measures:

- Reorient or relocate the receiving antenna.
- Increase the separation between the equipment and the receiver.
- Connect the equipment to an outlet on a circuit different from that to which the receiver is connected.
- Consult customer care, the dealer, or an experienced radio/TV technician for help.

CAUTION: Modification or changes to this equipment not expressly approved by Radio Systems Corporation may void the user's authority to operate the equipment.



Important Recycling Advice

Please respect the Waste Electrical and Electronic Equipment regulations in your country. This equipment must be recycled. If you no longer require this equipment, do not place it in the normal municipal waste system. Please return it to where it was purchased in order that it can be placed in our recycling system. If this is not possible, please contact the Customer Care Center for further information.

Warranty

One Year Non-Transferrable Limited Warranty

This Product has the benefit of a limited manufacturer's warranty. Complete details of the warranty applicable to this product and its terms can be found at www.petsafe.com.

Apple, the Apple logo, iPhone, iPad, and iPod touch are trademarks of Apple Inc., registered in the U.S. and other countries. App Store is a service mark of Apple Inc. Android, Google Play and the Google Play logo are trademarks of Google Inc.

Radio Systems Corporation
10427 PetSafe Way, Knoxville, TN 37932 • +1 (800) 732-2677 • petsafe.com

©2021 Radio Systems Corporation • YU400-2362/3